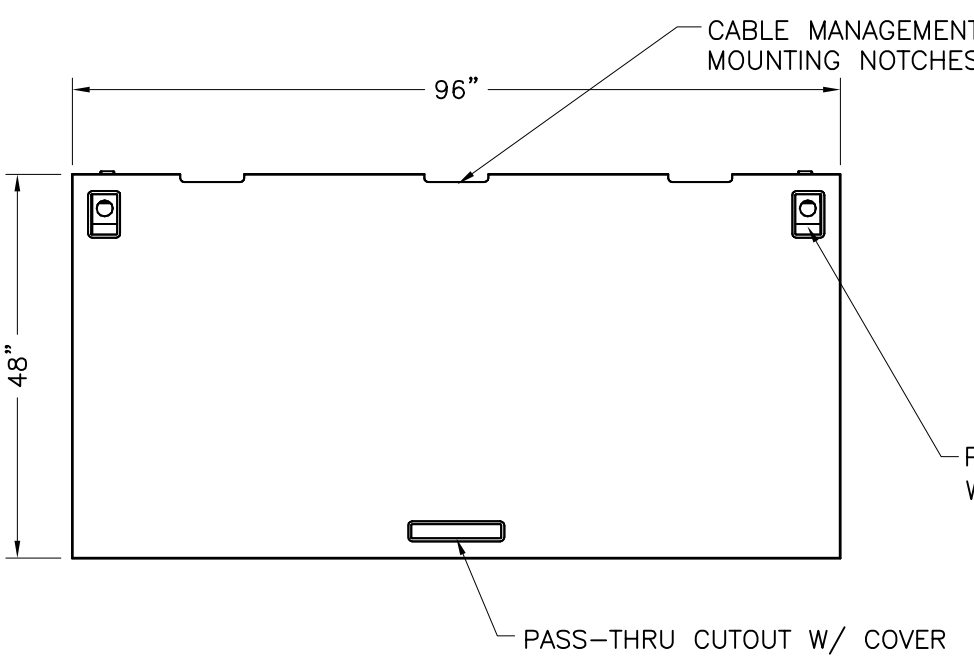

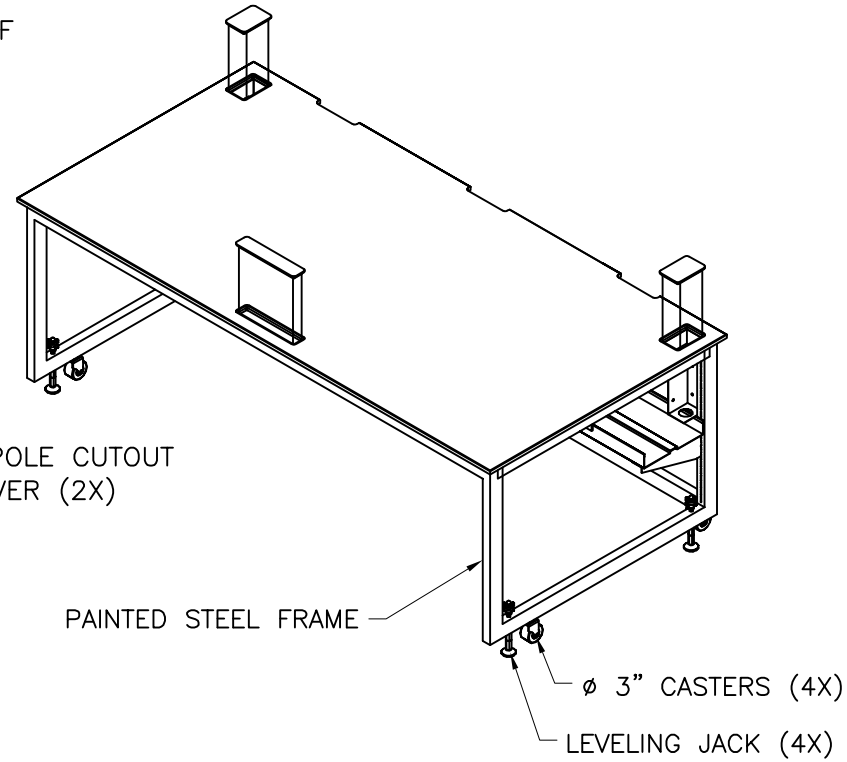

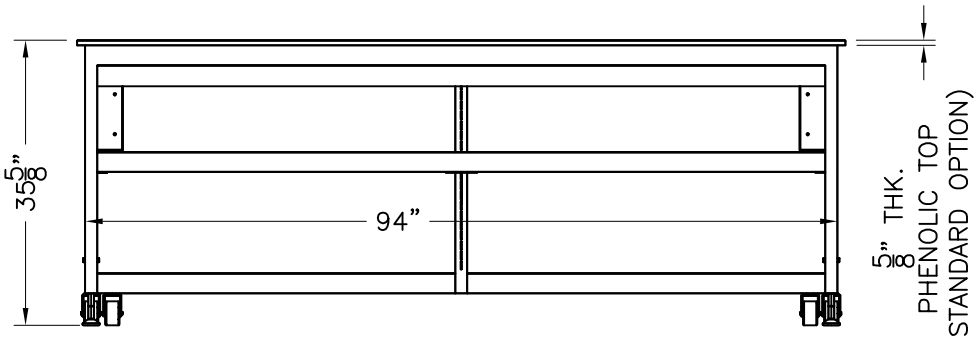

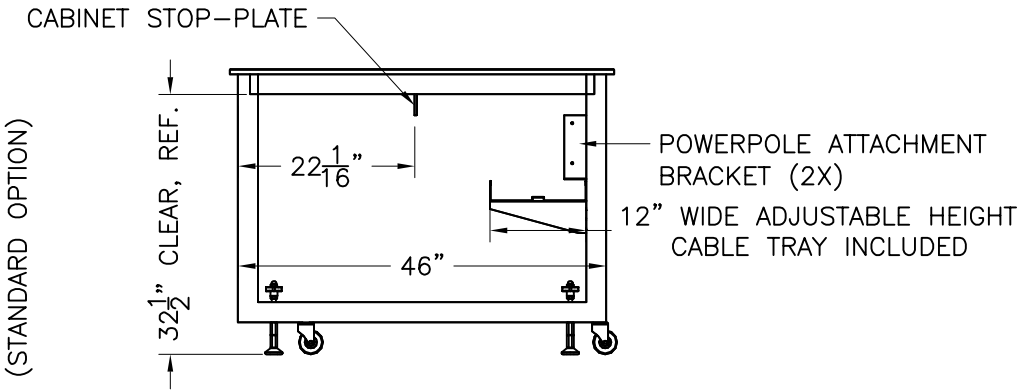

SHEET NO.	JOB NO.	CHK'D BY:	DRAWN BY:	DATE	SCALE	LFSystems CORP	249 OLD CHURCHMANS ROAD NEW CASTLE, DE 19720 PHONE: 302-322-0460 FAX: 302-322-2849	MTF-9648 96"x48"x35 5/8"H MOBILE TABLE ONE-SIDED, w/ L/R CUTOUTS FOR POWERPOLES	PROJECT
			BJS	06-12-06	NONE				