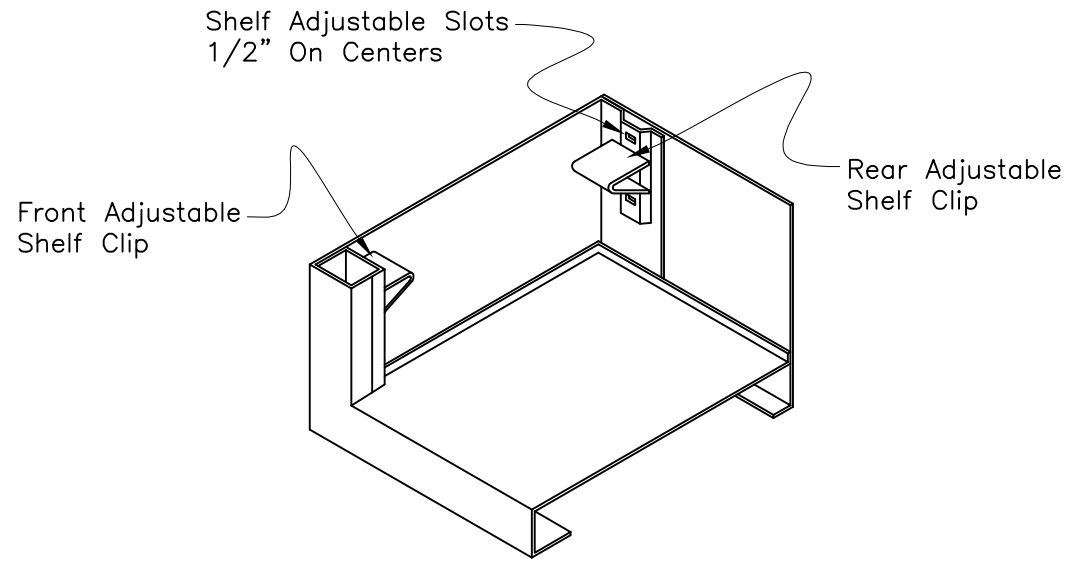

Adjustable Shelf Clip Detail

PART NUMBER

M9C–42

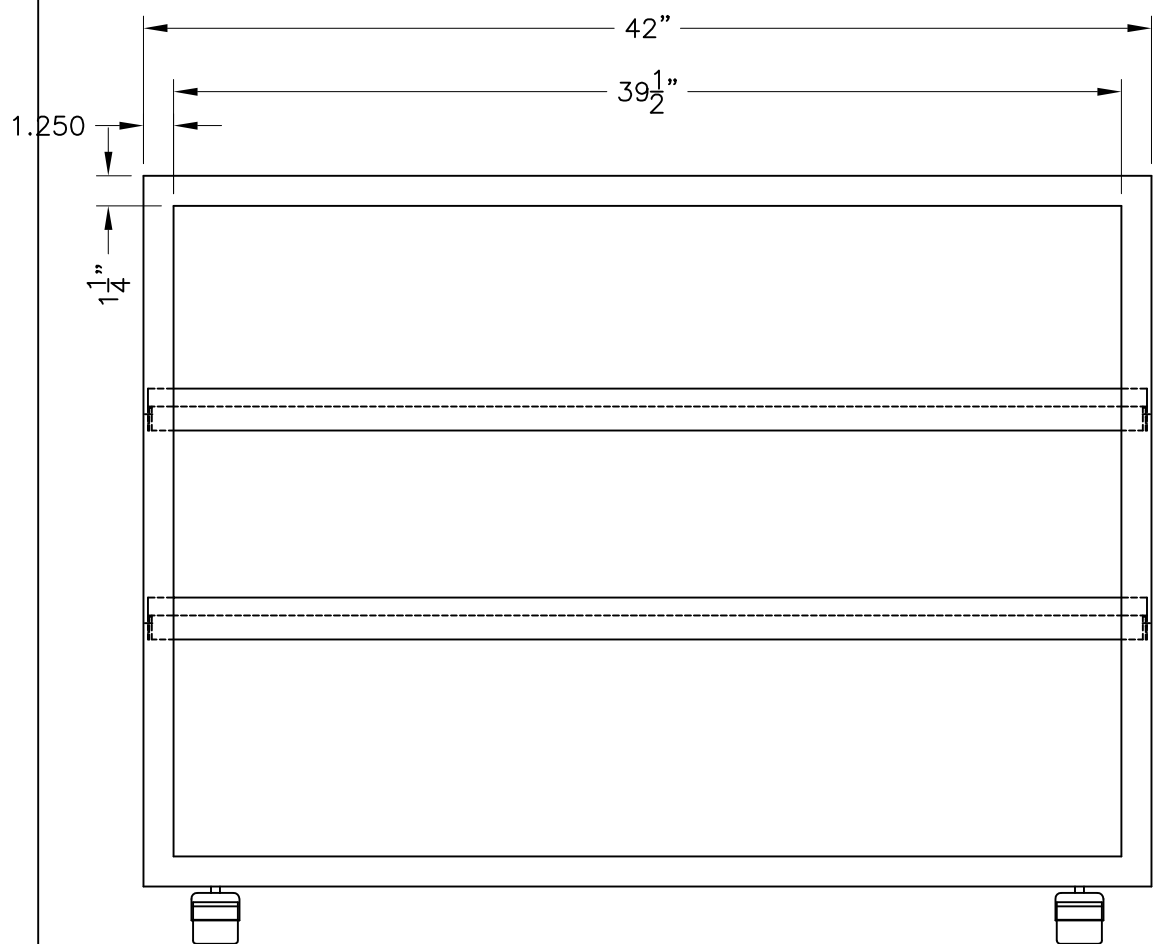

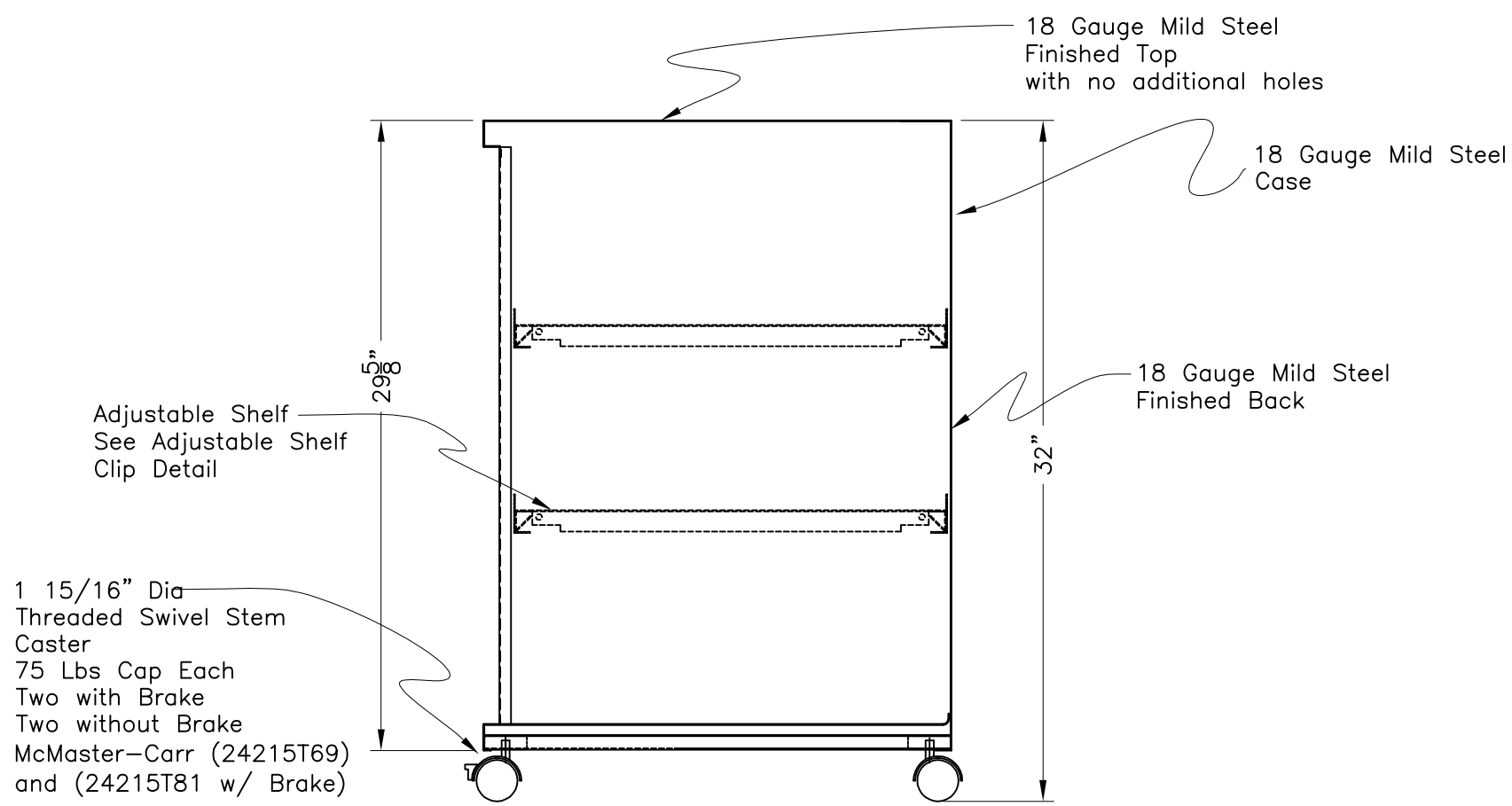

PROJECT

ROLLING CABINET, OPEN SHELVING
42"W X 22"D X 32"H

LFS Systems CORP
249 OLD CHURCHMANS ROAD
NEW CASTLE, DE 19720
PHONE: 302–322–0460
FAX: 302–322–2849

SCALE
1"=1'–0"

DATE
10–08–03

DRAWN BY:
BJS

CHK'D BY:

JOB NO.

SHEET NO.