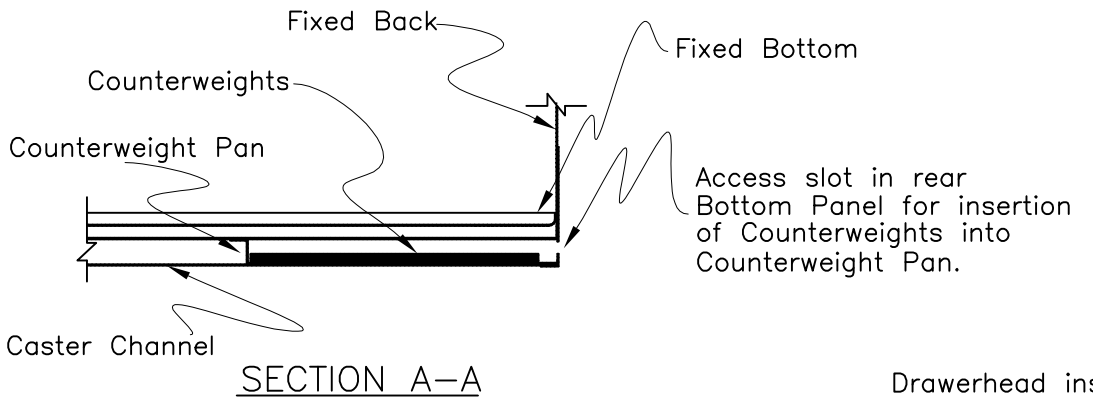

SECTION A–A

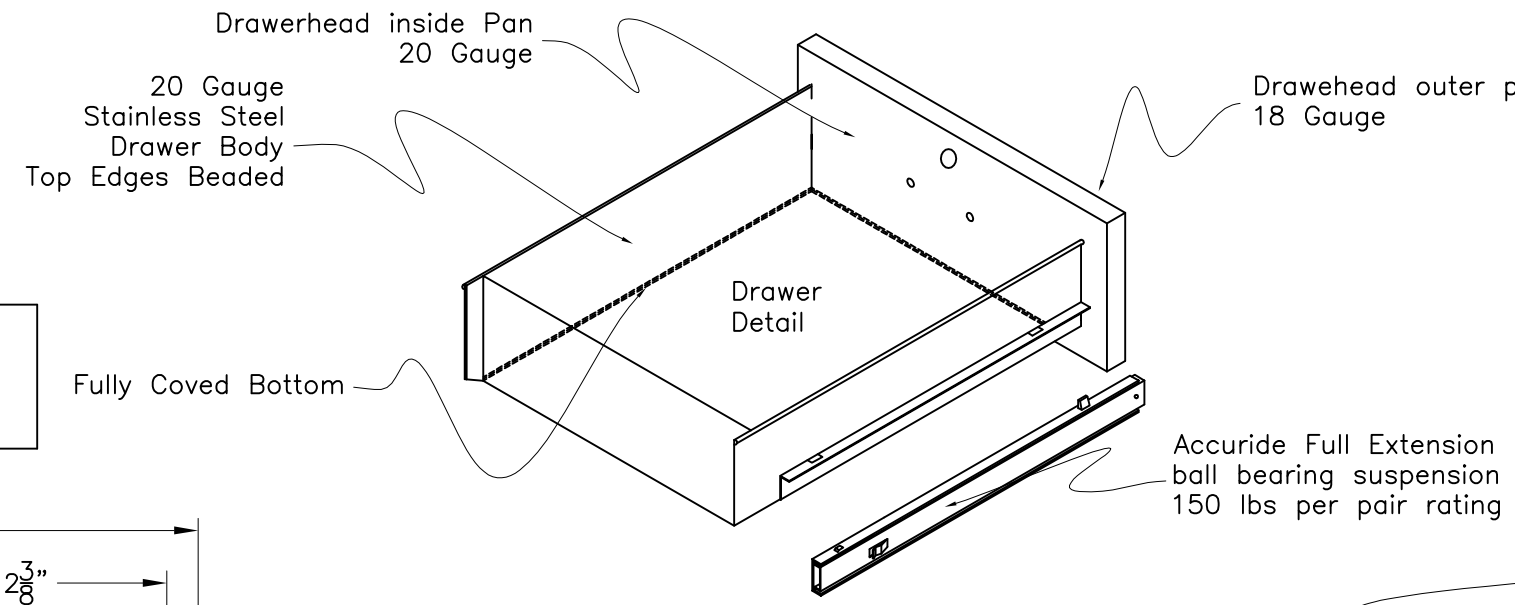

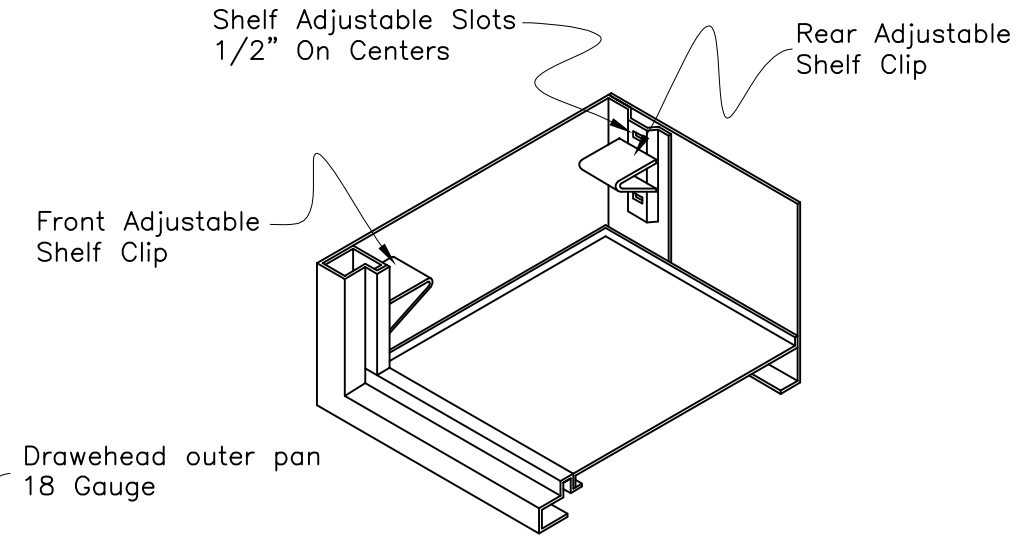

Adjustable Shelf Clip Detail

PART NUMBER

M3C–30

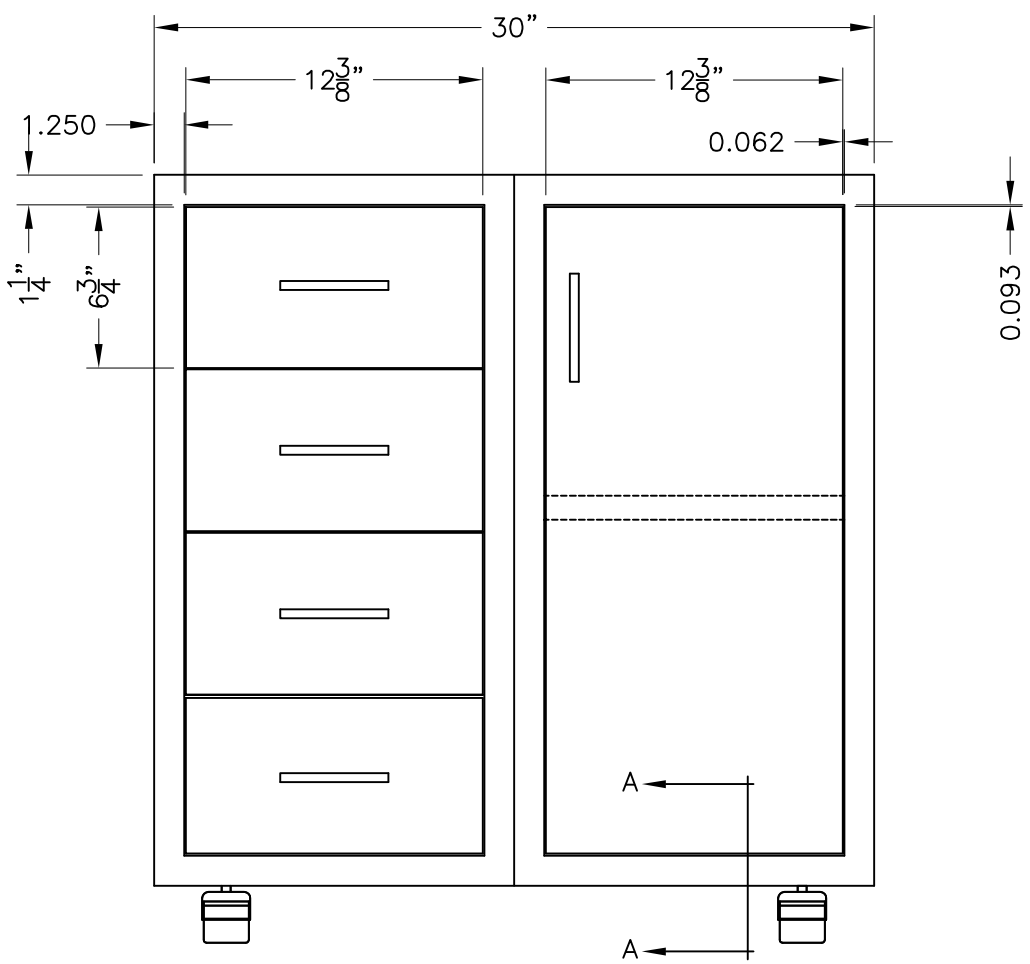

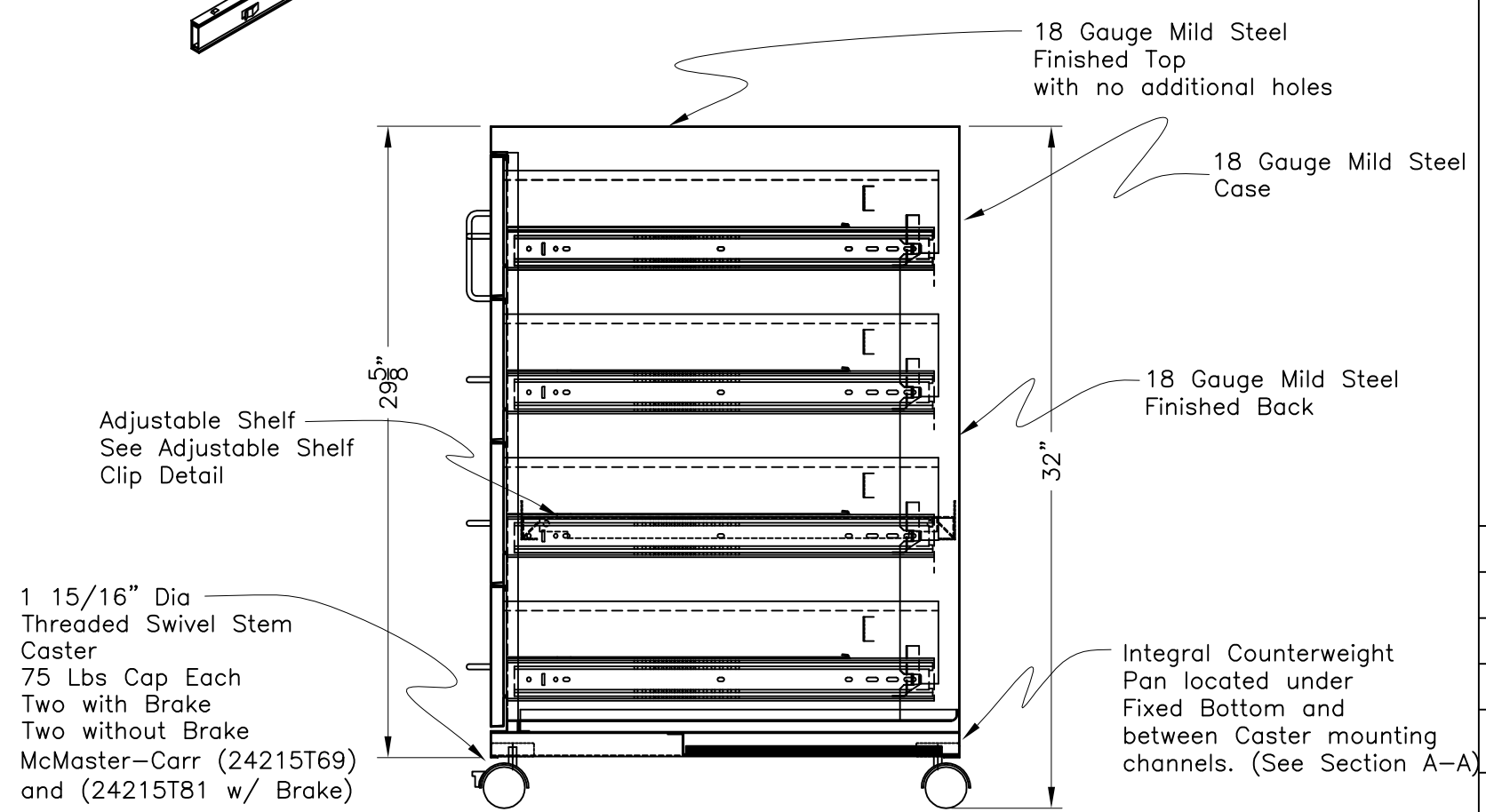

PROJECT

ROLLING CABINET, 1 DOOR, 1 ADJ. SHELF
4 DRAWERS 30"W X 22"D X 32"H

LFS Systems CORP
249 OLD CHURCHMANS ROAD
NEW CASTLE, DE 19720
PHONE: 302–322–0460
FAX: 302–322–2849

SCALE	1"=1'–0"
DATE	6–8–04
DRAWN BY:	JMN
CHK'D BY:	
JOB NO.	
SHEET NO.	